THE BRONZE CRAFT CORPORATION

STORM HINGES

INLINE MOUNTING

Smoothness of operation...

with the beauty & strength of stainless steel...

- Tested to AAMA 904.1 standard.
- Superior Structural Wind Load Capability.
- All 300 Series Stainless Steel.
- Slide Mechanism Incorporates A Concealed Non-Structural Delrin Sleeve for Smoothness of Operation and Application of Friction.
- Readily Available From Stock.

Why Use An Asymmetric End Cap?

This proven asymmetric locating system on the Inline Storm hinge uses the full width of the vent arm to ensure accurate collection of the vent.

This means that the end point on the vent arm is collected earlier than on conventional symmetrical hinges and prevents the natural window geometry from forcing the vent point outside the end cap into a failed position.

This then ensures that the end point is firmly directed towards the closed position. The unique stainless steel end point and cap provides smoother operation, longer life, and superior structural load capabilities.

The positive fit of the Inline Storm end point in the end cap helps to provide a weather-tight seal for the window.

PUB. NO. 906 12-04

PROJECTED

Part Number	Hinge Size	Sash Height Max.	Sash Weight Max.	Opening Angle Max.	Min. Pack
851-090-8046	10″	30″ (762 mm)	110 LB (50 kg)	75°	25 pr.
851-091-8046	10″ Shim *	30″ (762 mm)	110 LB (50 kg)	75°	25 pr.
851-092-8046	16″	44″ (1120 mm)	138 LB (63 kg)	90°	25 pr.
851-093-8046	16″ Shim *	44″ (1120 mm)	138 LB (63 kg)	90°	25 pr.
851-094-8046	22″	52″ (1321 mm)	165 LB (75 kg)	90°	25 pr.
851-095-8046	22″ Shim *	52″ (1321 mm)	165 LB (75 kg)	90°	25 pr.
851-096-8046	26″	79″ (2200 mm)	264 LB (120 kg)	20°	20 pr.
851-097-8046	26″ Shim *	79″ (2200 mm)	264 LB (120 kg)	20°	20 pr.

** .125 (3.17mm) Shim added to vent arm.*

CASEMENT

Part Number	Hinge Size	Sash Height Max.	Sash Weight Max.	Opening Angle Max.	Min. Pack
851-090-8046	10″	26″ (660 mm)	77 LB (35 kg)	75°	25 pr.
851-091-8046	10″ Shim *	26″ (660 mm)	77 LB (35 kg)	75°	25 pr.
851-092-8046	16″	33″ (838 mm)	103 LB (46.8 kg)	90°	25 pr.
851-093-8046	16″ Shim *	33″ (838 mm)	103 LB (46.5 kg)	90°	25 pr.

** .125 (3.17mm) Shim added to vent arm.*

NOTE: WE RESERVE THE RIGHT TO ALTER SPECIFICATIONS IN FURTHERING OUR POLICY OF CONTINUAL PRODUCT IMPROVEMENT.

IMPORTANT: UNDER NO CIRCUMSTANCES SHOULD THE SIZE OR WEIGHT OF THE WINDOW EXCEED THE STATED CAPACITY OF THE FRICTION HINGE USED.

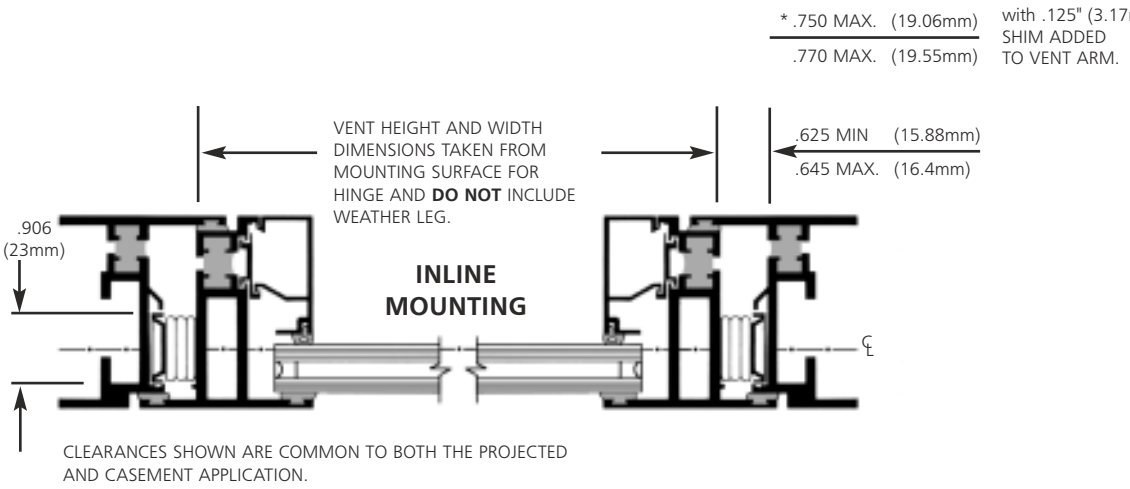

MATERIALS

TRACK AND LINKS:
300 Series Stainless Steel

ADJUSTABLE LIMIT STOP:
300 Series Stainless Steel

END CAPS:
300 Series Stainless Steel

COLLECTION TIP:
300 Series Stainless Steel

SLIDE MECHANISM:
300 Series Stainless Steel (incorporates a concealed Delrin wear strip)

RIVETS:
300 Series Stainless Steel

WASHERS:
Nylon

FRICTION ADJUSTING SCREW:
300 Series Stainless Steel

* * **LOOSE RIVET** Hinges are available for 10″ and 16″ upon request.

NOTE:
Loose rivet versions are designed for use with casement and project out bottom windows that use rotary operations. Contact Bronze Craft 800-488-7747 for design assistance.

Patent Nos.
US PATENT #4889852-4718144
UK PATENT #2133074-2133458

securistyle

Innovation in Window Hardware

DISTRIBUTED BY: BRONZE CRAFT

NORTH AMERICAN SALES OFFICE

37 WILL ST., P.O. BOX 788
NASHUA, NH 03061-0788
800-488-7747
TEL: 603-883-7747 FAX: 603-883-0222
EMAIL:bronze@bronzecraft.com
www.bronzecraft.com

COPYRIGHT © 2004